BRACKETT AIRCRAFT COMPANY, INC.

7045 FLIGHTLINE DR., KINGMAN, AZ 86401 U.S.A. PH. 928-757-4005 FAX. 928-757-1948

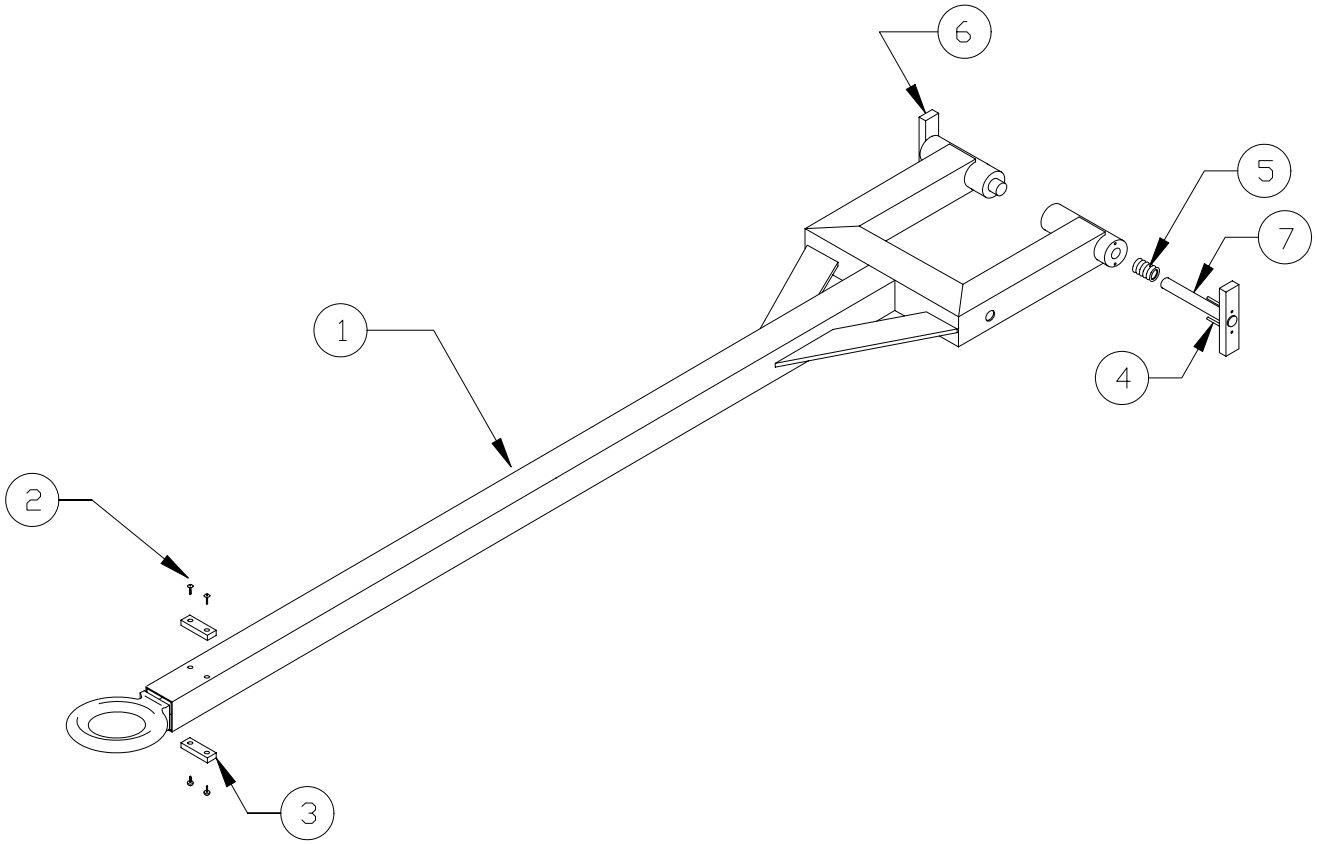

Page 1 of 1 **MODEL: TR-PIA**

ITEM NO.	PART NUMBER	DESCRIPTION	NO. REQ.
1	T-PIA-00	TUBE ASSEMBLY	1
2	SCREW FLAT 10-32 3/4	PHILLIPS FLAT HEAD SCREW	4
3	HT60-03-02	WEAR STRIP	2
4	HT60-01-11	STANDOFF	4
5	YY-33	SPRING	2
6	HT60-01-10	RELEASE BAR	2
7	HT60-01-04	ATTACH PIN	2