BAC

BRACKETT AIRCRAFT COMPANY INC.

www.brackettaircraft.com

BDW-AT HELICOPTER WHEEL SET

AIRCRAFT: EUROCOPTER
SPEC.: AS350, EC120
WT.: 35 LBS. (PERSIDE)
SHIPPING WT.: 80 LBS.
FINISH: POWDER COAT ORANGE

BRACKETT AIRCRAFT COMPANY INC.

www.brackettaircraft.com

BDW-AT HELICOPTER WHEEL SET

LEFT SIDE SHOWN
AIRCRAFT: EUROCOPTER
SPEC.: AS350, EC120
WT.: 35 LBS. (PERSIDE)
SHIPPING WT.: 80 LBS.
FINISH: POWDER COAT ORANGE
S/N 765
FEB. 08 AND NEWER

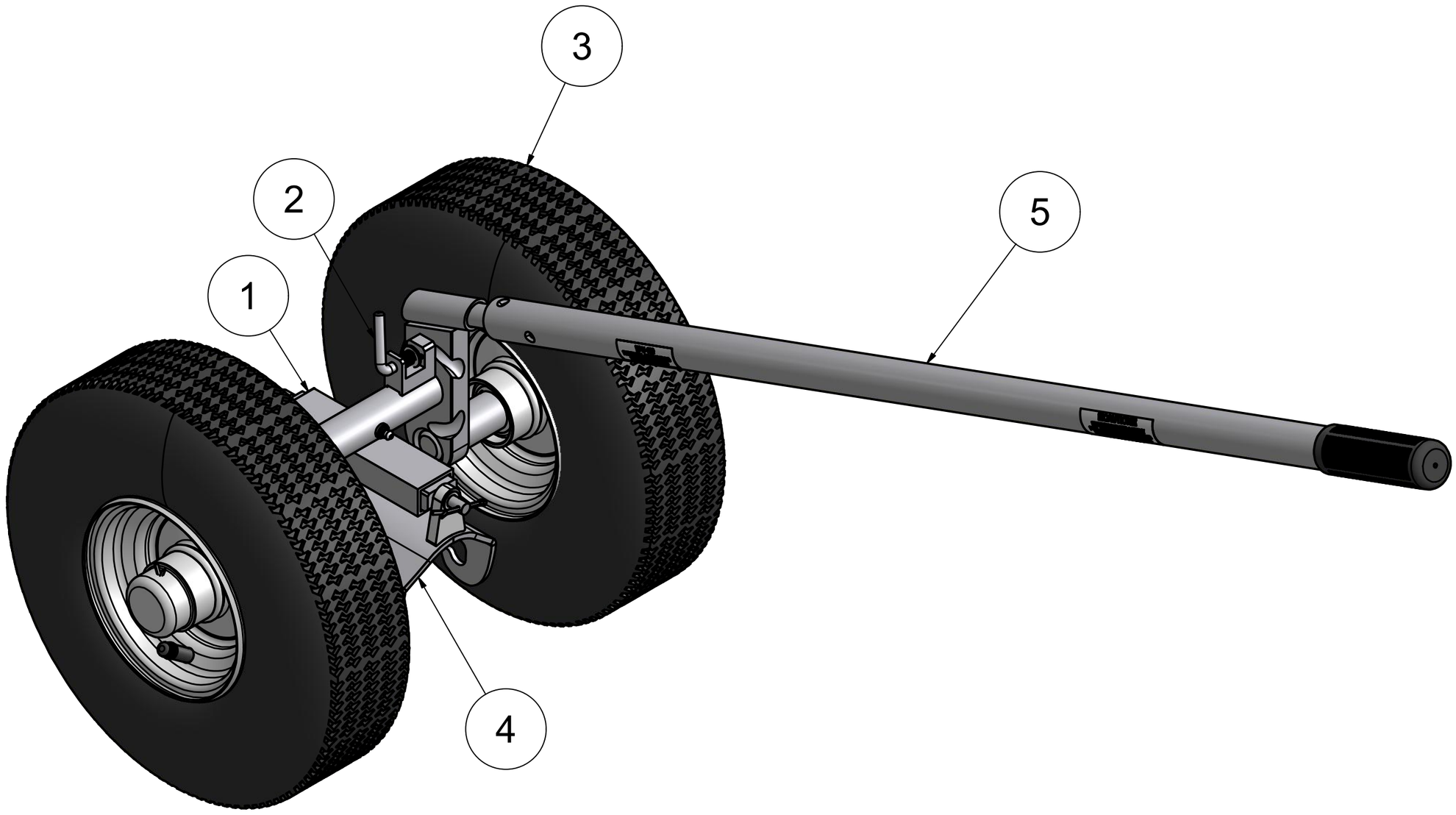

PARTS LIST

ITEM	QTY	PART NUMBER	DESCRIPTION
1	1	CONTACT BAC	FRAME ASSEMBLY
2	1	W-U-LPK	L-PIN ASSEMBLY
3	2	W-53066	TIRE ASSEMBLY
4	1	W-CAT-00	CARRIER
5	1	W-U-110	HANDLE ASSEMBLY

BAC

BRACKETT AIRCRAFT COMPANY INC.

www.brackettaircraft.com

W-53066 TIRE ASM.

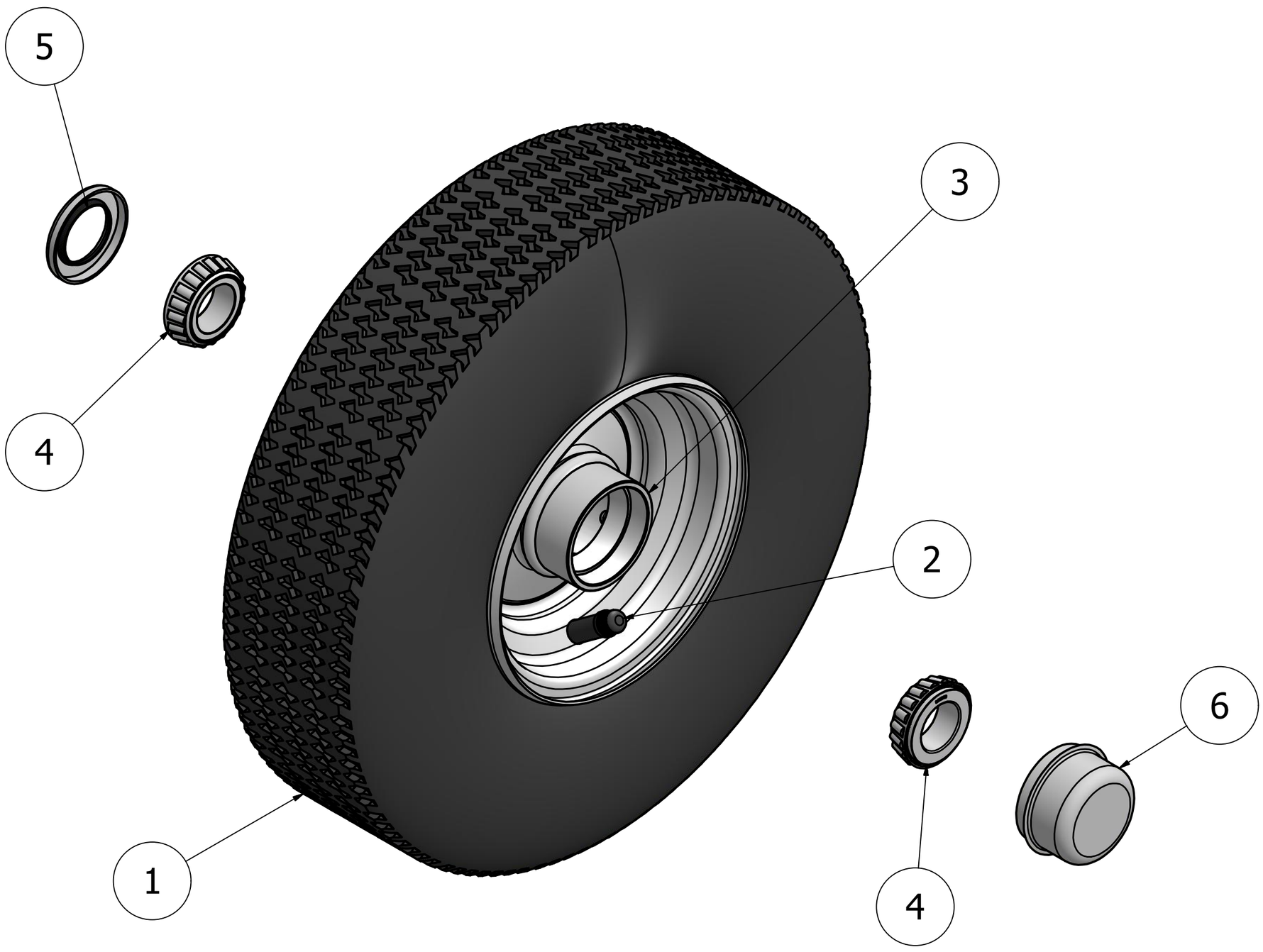

PARTS LIST

ITEM	QTY	PART NUMBER	DESCRIPTION
1	1	W-53066TR	W-5.30/4.50 X 6 6 PLY TIRE
2	1	W-53066TB	5.30/4.50-6 TUBE W/TR-13 INNER TUBE
3	1	W-53066WH	WHEEL ASSEMBLY
4	2	L44643	TAPERED ROLLER BEARING
5	1	12192VB	GREASE SEAL
6	1	HC-1	HUB CAP

BAC

BRACKETT AIRCRAFT COMPANY INC.

www.brackettaircraft.com

W-LPK L-PIN KIT

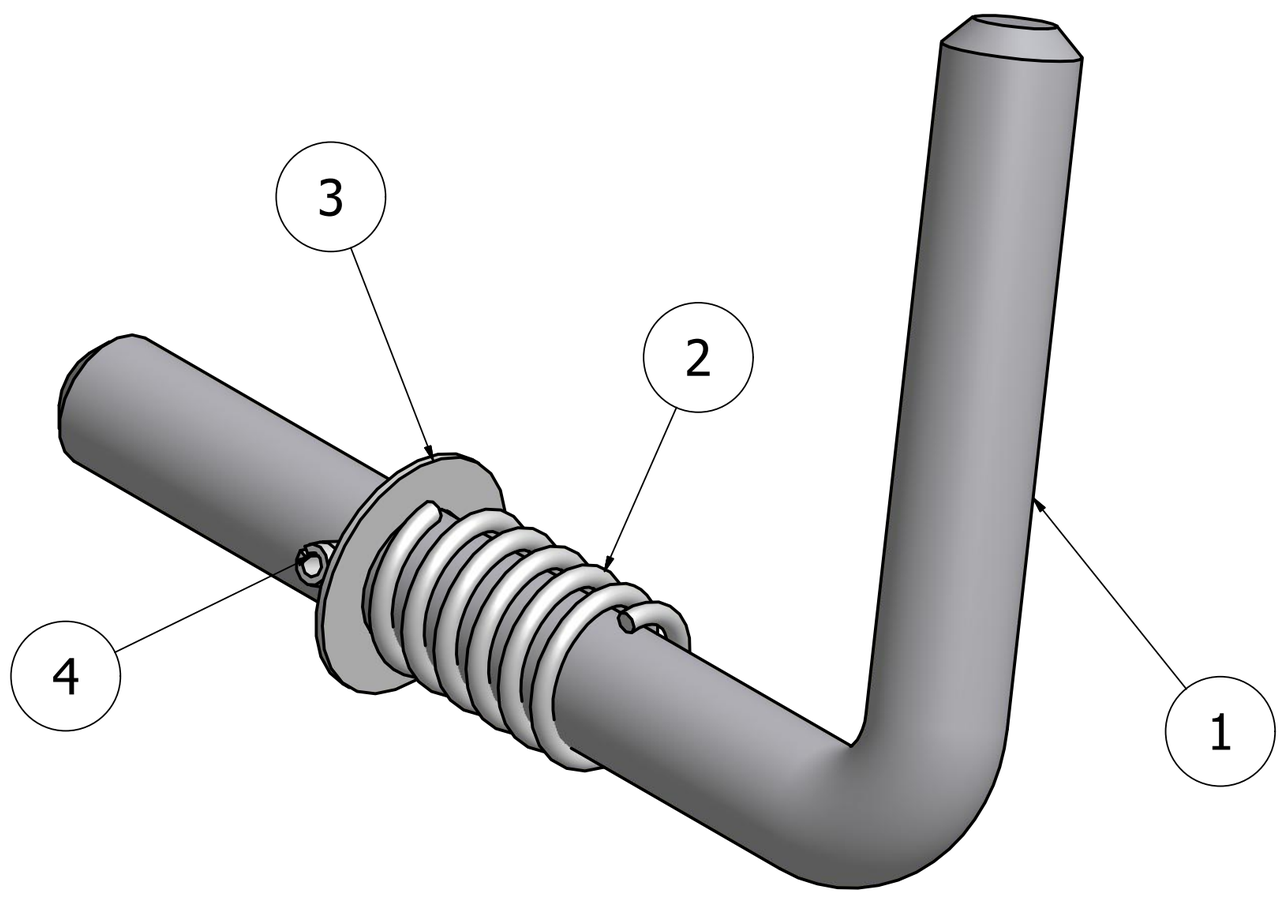

PARTS LIST

ITEM	QTY	PART NUMBER	DESCRIPTION
1	1	W-U-101	L-PIN
2	1	S-264	SPRING
3	1	98017A689	5/16 THIN WASHER (AN960-516)
4	1	92373A143	3/32 X 1/2 ROLL PIN S.S.

1/5/2015